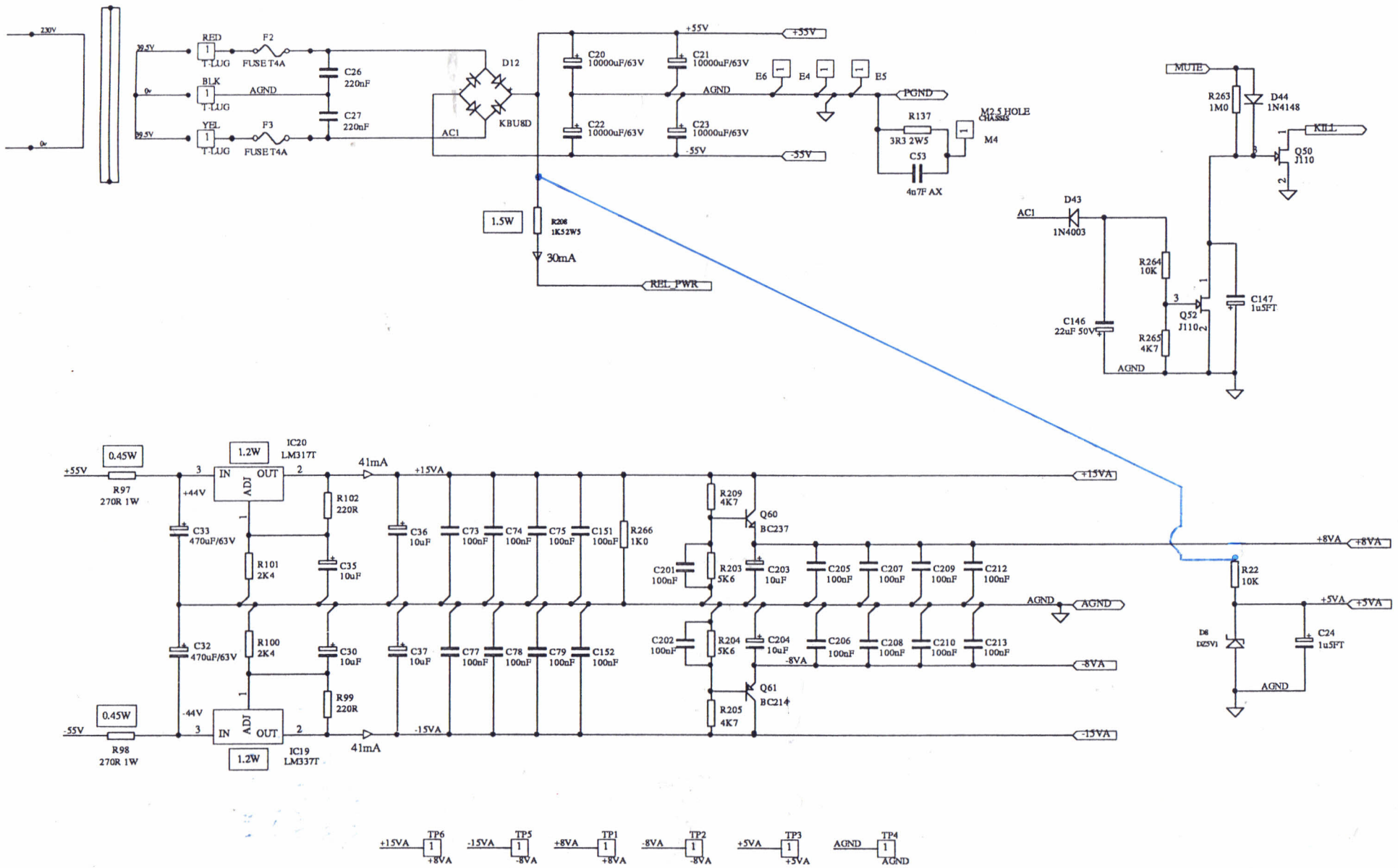

Description:

Quad Electroacoustics	Title: 99 MONO POWER SUPPLY
Date: Jan 2000	2 of 6